APPROVED 29/Oct/2021 14:11:55 GMT

Basic Parts Gearbox CD26D/CD26HD

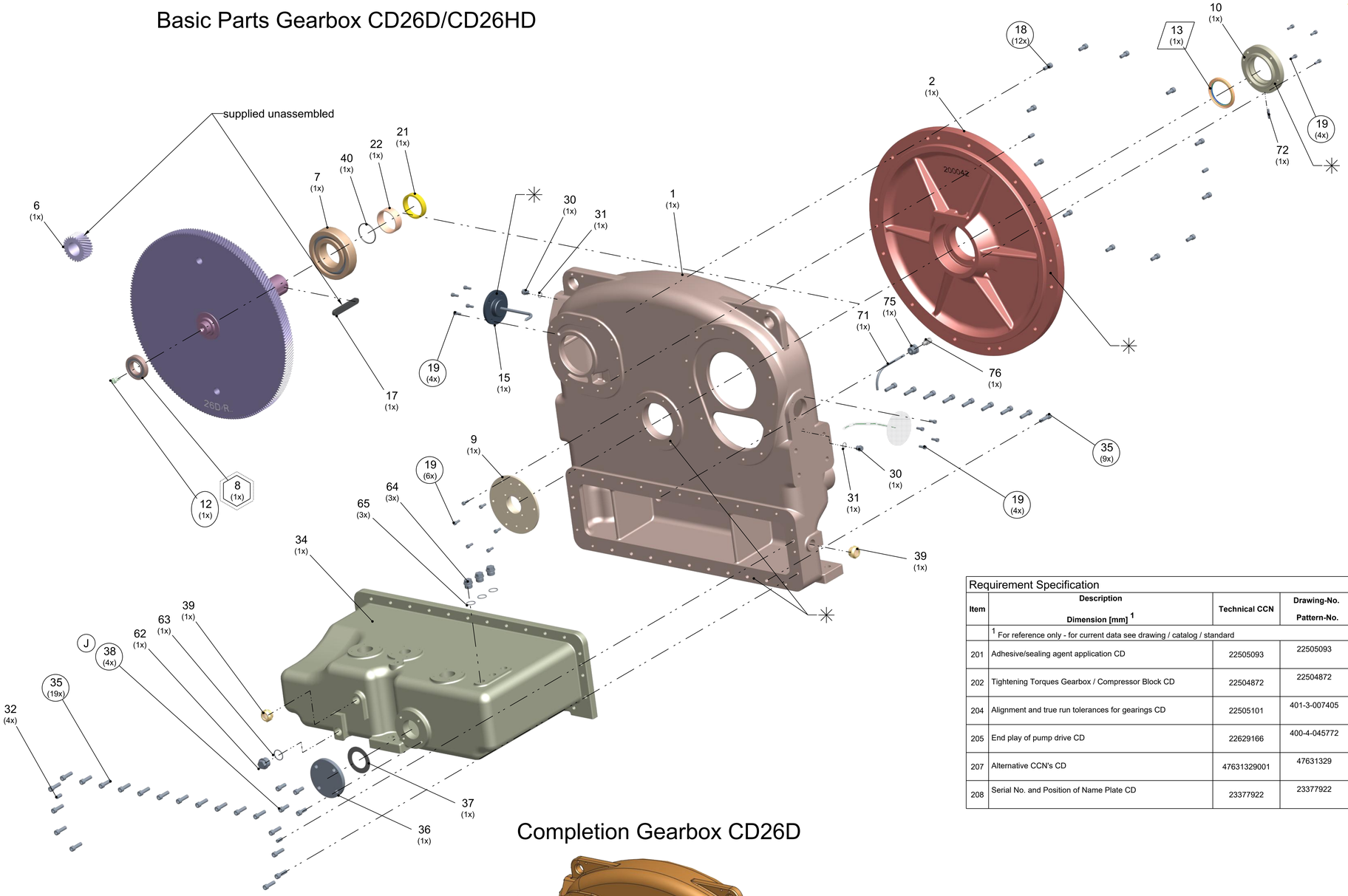

Completion Gearbox CD26D

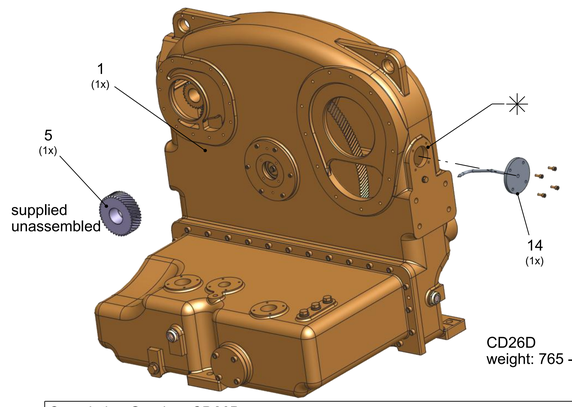

CD26D
weight: 765 - 780 kg

J Completion Gearbox CD26HD

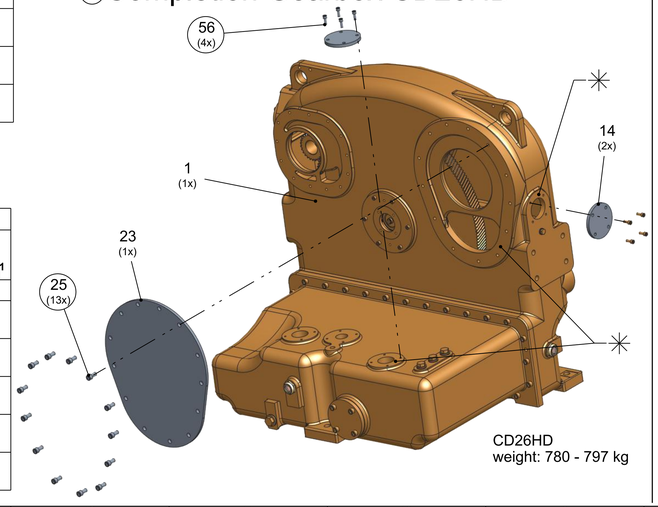

CD26HD
weight: 780 - 797 kg

Mounted with adhesive agents acc. to BOM item 201

Surface seal acc. to BOM item 201 (only in mating area of connected parts)

Gearbox Common Parts CD26D/HD					
Item	Description Dimension [mm] [1]	Quantity	Technical CCN	Drawing-No. Pattern-No.	Material [1] Weight/Pc.[kg] [1]
	[1] For reference only - for current data see drawing / catalog / standard				
1	Gear housing CD26D 1035x230x1030	1	see Variants	401-0-004710 119498/4	see Variants 280
2	Gear Cover CD26D Ø820x92	1	see Variants	see Variants 200042	see Variants 110
3	Driving Wheel with Shaft CD26D see Variants	1	see Variants	401-1-006573	see Variants
6	Pinion 2nd Stage CD26D see Variants	1	see Variants	401-2-006575	22972129 see Variants
7	Grooved ball bearing Ø180/85x41 (6317)	1	22502348002	22502348	St 4.25
8	Cylindrical Roller Bearing Ø45/85x19 (NJ209E)	1	39925391	22480578	St/Polyamid 0.440
9	Bearing Bush CD26D Ø210x39.9	1	see Variants	see Variants	401-6-006781 4.13
10	Cover G26D Ø170/90x32	1	22936462	401-3-003444	401-6-006781 2.61
12	Coupler Element CD Ø19/M12x38.5	1	37989365	37989365	47679157 0.04
13	Single lip seal (G26D) Ø85/110x10	1	39332788	39332788	PTFE/Viton 0.080
15	Oil shower 2nd stage G26D Ø118/10x1.5x180	1	22936496	400-3-050087	1.28
17	Key 20x12x130	1	see Variants	see Variants	401-6-007580 see Variants
18	Hexagon socket head cap screw ISO 4762 - M12x25 - 8.8 Ø18x37	12	96708268	96708268	St 0.034
19	Hexagon socket head cap screw ISO 4762 - M8x20 - 8.8 Ø13x28	18	96708052	96708052	St 0.013
21	Spacer ring G26D Ø88/75x19	1	39332796	400-4-050089	401-6-006443 0.248
22	Wear sleeve 10° left-hand lead Ø75/85x30	1	39332804	401-2-006636	100Cr6H 0.300
30	Hexagon head screw plug DIN 910 - M16x1.5 - St Ø21/s17/M16x1.5/x21	2	96748363	96748363	St 0.035
31	Sealing ring DIN 7603 - A16x20 - St Ø16.2x19.9x1.5	2	96748397	96748397	St 0.001
32	Parallel pin with internal thread ISO 8733 - 12x24 - St Ø12x24	4	96747118	96747118	St 0.010
34	Oil tank CD26D/CD42D1 1374x734x387.2	1	see Variants	400-0-049251 119499/3	see Variants 371
35	Hexagon socket head cap screw ISO 4762 - M12x40 - 8.8 Ø18x52	28	96708292	96708292	St 0.050
36	Flange EN 1092-1 /05 A/DN50/PN6/S235JR Ø140x14	1	96748785	96748785	S235JR 1.5
37	Gasket EN 1514-1 /Form IBC/DN50/PN6 Ø96/61x2	1	47644979001	47644979	47644979 0.013
38	Hexagon socket head cap screw ISO 4762 - M12x30 - 8.8 Ø18x42	4	96708276	96708276	St 0.039
39	Oil Level indicator Ø48x26	2	37984200	401-4-002278	see Variants see Variants
40	O-Ring SAE AS 568 66.27x3.53	1	95022307	95022307	FKM70 0.004
62	Hexagon head screw plug DIN 910 - G1 A - St Ø39/s27/G1/x32	1	96748520	96748520	St 0.195
63	Sealing ring DIN 7603 - A33x39 - St Ø33.3x38.9x2	1	96748405	96748405	St 0.005
64	Hexagon head screw plug DIN 910 - G3/4 A - St Ø32/s24/G3/4 /x30	3	96750088	96750088	St 0.127
65	Sealing ring DIN 7603 - A27x32 - St Ø27.3x31.9x2	3	96749734	96749734	St 0.003
71	Drain pipe CD 8x1x200	1	39259403	39259403	401-6-006725 0.034
72	Drain pipe CD 8x2x35	1	39259411	39259411	401-6-006725 0.010
75	Fitting, reducer, with sealing 1/4"-3/4"	1	24620049	22579411	St/FPM 0.103
76	Male connector through G1/4x35(37)	1	39259452	22579429	St 0.040

Completion Gearbox CD26HD					
Item	Description Dimension [mm] [1]	Quantity	Technical CCN	Drawing-No. Pattern-No.	Material [1] Weight/Pc.[kg] [1]
	[1] For reference only - for current data see drawing / catalog / standard				
1	Common Parts Gearbox CD26D/HD	1		22933477	
14	Oil Return Cover CD Ø118x10	2	22920953	22920953	401-6-006443 0.834
23	Cover plate CD26HD 513x420x10	1	22953772	400-4-033827	401-6-006443 13.1
25	Hexagon socket head cap screw ISO 4762 - M12x25 - 8.8 Ø18x37	13	96708268	96708268	St 0.034
56	Hexagon socket head cap screw ISO 4762 - M8x22 - 8.8 Ø13x30	4	96748553	96748553	St 0.013

Completion Gearbox CD26D					
Item	Description Dimension [mm] [1]	Quantity	Technical CCN	Drawing-No. Pattern-No.	Material [1] Weight/Pc.[kg] [1]
	[1] For reference only - for current data see drawing / catalog / standard				
1	Common Parts Gearbox CD26D/HD	1		22933477	
5	Pinion 1st Stage CD26D see Variants	1	see Variants	401-2-006574	22972129 see Variants
14	Oil shower 1st stage G26D Ø118/10x1.5x220	1	22936488	400-3-050086	1.33

Requirement Specification			
Item	Description Dimension [mm] [1]	Technical CCN	Drawing-No. Pattern-No.
	[1] For reference only - for current data see drawing / catalog / standard		
201	Adhesive/sealing agent application CD	22505093	22505093
202	Tightening Torques Gearbox / Compressor Block CD	22504872	22504872
204	Alignment and true run tolerances for gearings CD	22505101	401-3-007405
205	End play of pump drive CD	22629166	400-4-045772
207	Alternative CCN's CD	47631329001	47631329
208	Serial No. and Position of Name Plate CD	23377922	23377922

APPROVED 29/Oct/2021 14:11:55 GMT

Shown CD26D

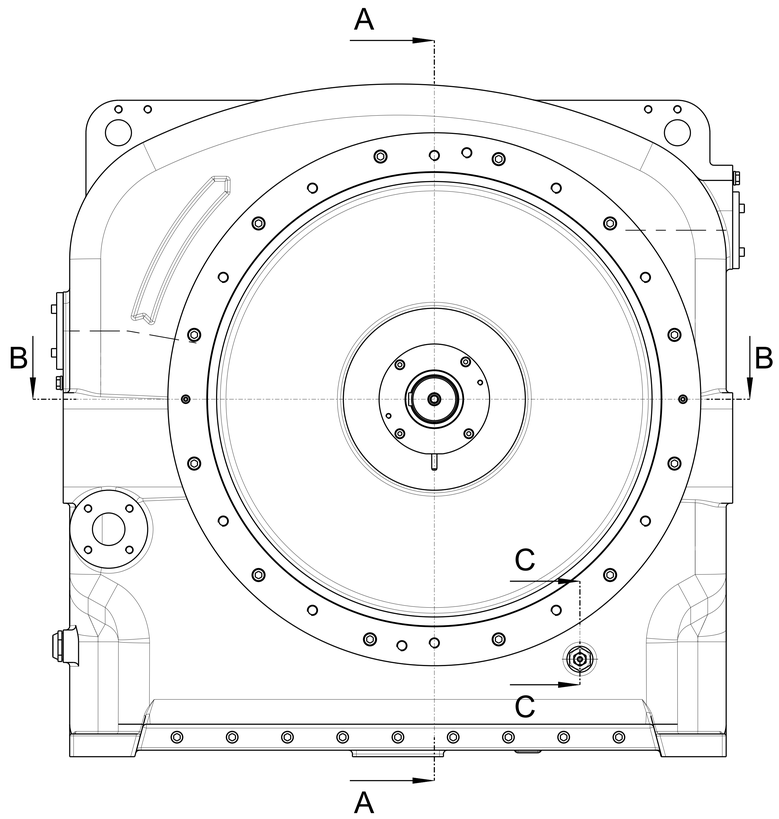

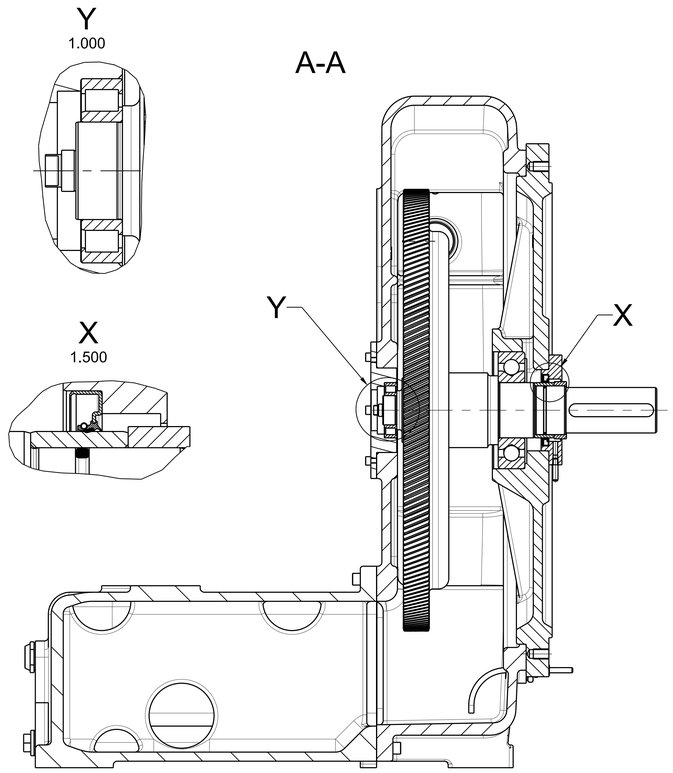

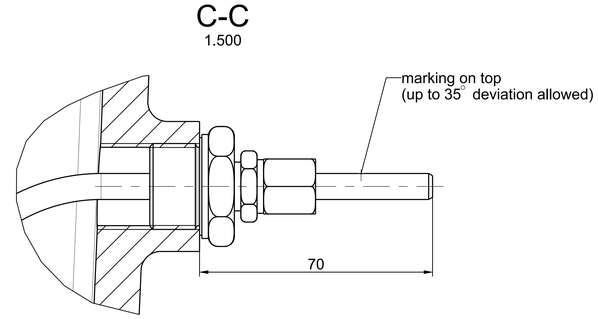

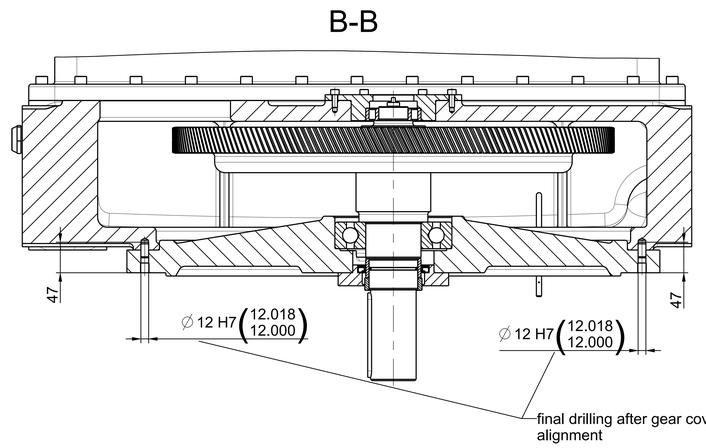

CD26HD

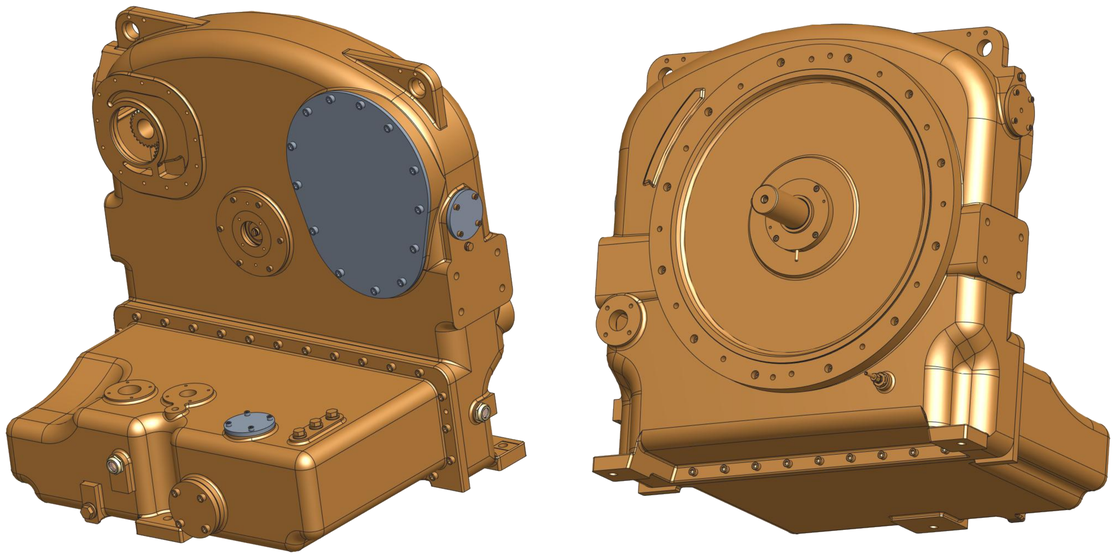

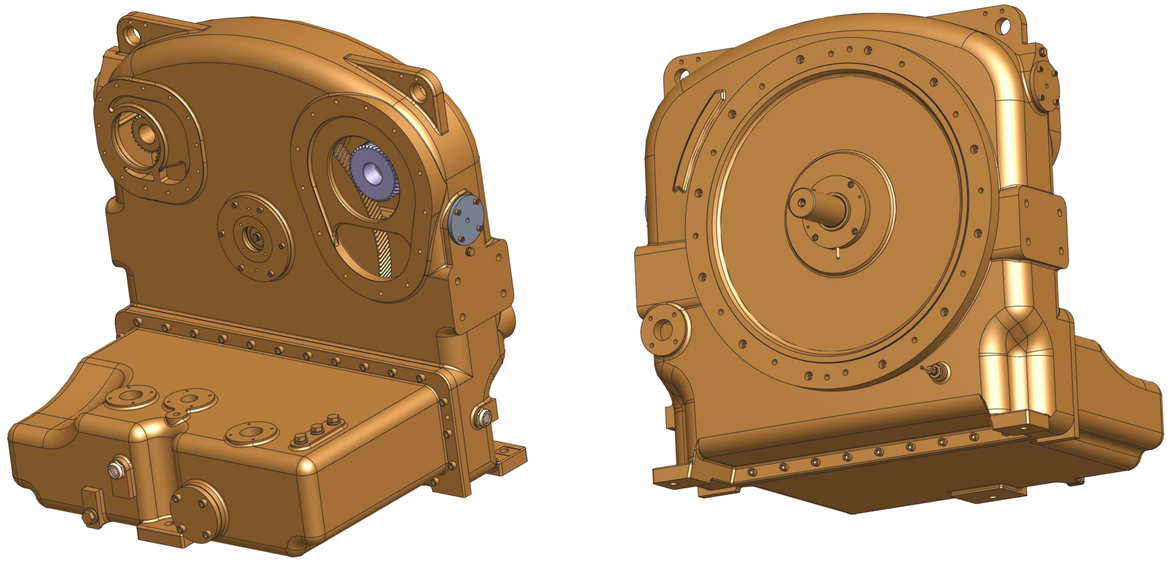

APPROVED 29/Oct/2021 14:11:55 GMT

Technical Variants Gear Housing Item 1

	Description Dimension [mm] [1]	Technical CCN	Material [1] Weight/Pc. [kg][1]
[1] For reference only - for current data see drawing / catalog / standard			
1	Gear housing CD26D 1035x230x1030	22935753	401-6-006688 280
2	Gear housing CD26D |GJS| 1035x230x1030	tbd	22859565 280

Technical Variants Oil Tank Item 34

	Description Dimension [mm] [1]	Technical CCN	Material [1] Weight/Pc. [kg][1]
[1] For reference only - for current data see drawing / catalog / standard			
1	Oil tank CD26D/CD42D1 1374x734x387.2	22936504	401-6-006688 371
2	Oil tank CD26D/CD42D1 |GJS| 1374x734x387.2	tbd	22859565 371

Technical Variants Key Item 17

	Description Dimension [mm] [1]	Technical CCN	Material [1] Weight/Pc. [kg][1]
[1] For reference only - for current data see drawing / catalog / standard			
1	Key DIN 6885 - A20x12x130 20x12x130	96753108	401-6-007580 0.244
2	Key (ANSI) CD26D 20x12x130	47553597002	401-6-007580 0.228

Technical Variants Gear Cover Item 2

	Description Dimension [mm] [1]	Technical CCN	Drawing-No. Pattern-No.	Material [1] Weight/Pc. [kg][1]
[1] For reference only - for current data see drawing / catalog / standard				
1	Gear Cover A CD26D |G13| Ø820x92	22934137	401-1-007513 200042	401-6-006688 110
2	Gear Cover A CD26D |G14| Ø820x92	22934145	401-1-007513 200042	401-6-006688 110
3	Gear Cover A CD26D |G15/24| Ø820x92	22934152	401-1-007513 200042	401-6-006688 110
4	Gear Cover B CD26D |G16/25| Ø820x92	22934160	401-1-007514 200042	401-6-006688 110
5	Gear Cover B CD26D |G17| Ø820x92	22934178	401-1-007514 200042	401-6-006688 110
6	Gear Cover B CD26D |G18| Ø820x92	22934186	401-1-007514 200042	401-6-006688 110
7	Gear Cover A CD26D |G19| Ø820x92	22934194	401-1-007513 200042	401-6-006688 110
8	Gear Cover A CD26D |G20| Ø820x92	22934202	401-1-007513 200042	401-6-006688 110
9	Gear Cover A CD26D |G21| Ø820x92	22934210	401-1-007513 200042	401-6-006688 110
10	Gear Cover A CD26D |G22| Ø820x92	22934228	401-1-007513 200042	401-6-006688 110
11	Gear Cover A CD26D |G23| Ø820x92	22934236	401-1-007513 200042	401-6-006688 110
12	Gear Cover A CD26D |G13|GJS| Ø820x92	tbd	401-1-007513 200042	22859565 110
13	Gear Cover A CD26D |G14|GJS| Ø820x92	tbd	401-1-007513 200042	22859565 110
14	Gear Cover A CD26D |G15/24|GJS| Ø820x92	tbd	401-1-007513 200042	22859565 110
15	Gear Cover B CD26D |G16/25|GJS| Ø820x92	tbd	401-1-007514 200042	22859565 110
16	Gear Cover B CD26D |G17|GJS| Ø820x92	tbd	401-1-007514 200042	22859565 110
17	Gear Cover B CD26D |G18|GJS| Ø820x92	tbd	401-1-007514 200042	22859565 110
18	Gear Cover A CD26D |G19|GJS| Ø820x92	tbd	401-1-007513 200042	22859565 110
19	Gear Cover A CD26D |G20|GJS| Ø820x92	tbd	401-1-007513 200042	22859565 110
20	Gear Cover A CD26D |G21|GJS| Ø820x92	tbd	401-1-007513 200042	22859565 110
21	Gear Cover A CD26D |G22|GJS| Ø820x92	tbd	401-1-007513 200042	22859565 110
22	Gear Cover A CD26D |G23|GJS| Ø820x92	tbd	401-1-007513 200042	22859565 110

Technical Variants Driving Wheel with Shaft Item 3

	Description Dimension [mm] [1]	Technical CCN	Material [1] Weight/Pc. [kg][1]
[1] For reference only - for current data see drawing / catalog / standard			
1	Driving Wheel with Shaft CD26D |G13| Ø662.085x421.5 (z=195)	22935126	173
2	Driving Wheel with Shaft CD26D |G14| Ø678.343x421.5 (z=205)	22935134	178
3	Driving Wheel with Shaft CD26D |G15| Ø692.291x421.5 (z=208)	22935142	183
4	Driving Wheel with Shaft CD26D |G16| Ø698.853x421.5 (z=214)	22935159	185
5	Driving Wheel with Shaft CD26D |G17| Ø703.900x421.5 (z=216)	22935167	187
6	Driving Wheel with Shaft CD26D |G18| Ø705.296x421.5 (z=216)	22935175	187
7	Driving Wheel with Shaft CD26D |G19| Ø634.604x421.5 (z=192)	22935183	164
8	Driving Wheel with Shaft CD26D |G20| Ø644.367x421.5 (z=195)	22935191	167
9	Driving Wheel with Shaft CD26D |G21| Ø655.538x421.5 (z=198)	22935209	171
10	Driving Wheel with Shaft CD26D |G22| Ø672.197x421.5 (z=201)	22935217	176
11	Driving Wheel with Shaft CD26D |G23| Ø684.492x421.5 (z=203)	22935225	180
12	Driving Wheel with Shaft CD26D |G24| Ø689.633x421.5 (z=212)	22935233	182
13	Driving Wheel with Shaft CD26D |G25| Ø679.722x421.5 (z=202)	22935241	179
14	Driving wheel with shaft CD26D |G13|DSANSI| Ø662.085x421.5 (z=195)	tbd	173
15	Driving wheel with shaft CD26D |G14|DSANSI| Ø678.343x421.5 (z=205)	tbd	178
16	Driving wheel with shaft CD26D |G15|DSANSI| Ø692.291x421.5 (z=208)	tbd	183
17	Driving Wheel with Shaft CD26D |G16|DSANSI| Ø698.853x421.5 (z=214)	tbd	185
18	Driving wheel with shaft CD26D |G17|DSANSI| Ø703.900x421.5 (z=216)	tbd	187
19	Driving wheel with shaft CD26D |G18|DSANSI| Ø705.296x421.5 (z=216)	tbd	187
20	Driving Wheel with Shaft CD26D |G19|DSANSI| Ø634.604x421.5 (z=192)	tbd	164
21	Driving wheel with shaft CD26D |G20|DSANSI| Ø644.367x421.5 (z=195)	tbd	167
22	Driving Wheel with Shaft CD26D |G21|DSANSI| Ø655.538x421.5 (z=198)	tbd	171
23	Driving wheel with shaft CD26D |G22|DSANSI| Ø672.197x421.5 (z=201)	tbd	176
24	Driving Wheel with Shaft CD26D |G23|DSANSI| Ø684.492x421.5 (z=203)	tbd	180
25	Driving Wheel with Shaft CD26D |G24|DSANSI| Ø689.633x421.5 (z=212)	tbd	182
26	Driving wheel with shaft CD26D |G25|DSANSI| Ø679.722x421.5 (z=202)	tbd	179

Technical Variants Bearing Bush Item 9

	Description Dimension [mm] [1]		Technical CCN	Material [1] Weight/Pc. [kg][1]
[1] For reference only - for current data see drawing / catalog / standard				
1	Bearing bush A CD26D |G13| Ø210x39.9		37989464	22653828
2	Bearing bush A CD26D |G14| Ø210x39.9		37990264	22653828
3	Bearing bush A CD26D |G15|G24| Ø210x39.9	(K)	790051000GHH	22653828
4	Bearing bush B CD26D |G16|G25| Ø210x39.9	(K)	79056000GHH	22653836
5	Bearing bush B CD26D |G17| Ø210x39.9		22653885	22653836
6	Bearing bush B CD26D |G18| Ø210x39.9	(K)	83901800GHH	22653836
7	Bearing bush A CD26D |G19| Ø210x39.9	(K)	83901801GHH	22653828
8	Bearing bush A CD26D |G20| Ø210x39.9		37990462	22653828
9	Bearing bush A CD26D |G21| Ø210x39.9	(K)	83901803GHH	22653828
10	Bearing bush A CD26D |G22| Ø210x39.9	(K)	83901804GHH	22653828
11	Bearing bush A CD26D |G23| Ø210x39.9		37989316	22653828

Technical Variants Pinion 1st Stage Item 5 (for CD26D only)

	Description Dimension [mm] [1]	Technical CCN	Material [1] Weight/Pc. [kg][1]
[1] For reference only - for current data see drawing / catalog / standard			
1	Pinion 1st Stage CD26D |G13| Ø168.220x45 (z=48)	22935274	22972129 6.49
2	Pinion 1st Stage CD26D |G14| Ø147.697x45 (z=43)	22935282	22972129 4.76
3	Pinion 1st Stage CD26D |G15| Ø130.292x45 (z=37)	22935290	22972129 3.48
4	Pinion 1st Stage CD26D |G16| Ø121.099x45 (z=35)	22935308	22972129 2.87
5	Pinion 1st Stage CD26D |G17| Ø110.899x45 (z=32)	22935316	22972129 2.25
6	Pinion 1st Stage CD26D |G18| Ø107.727x45 (z=31)	22935324	22972129 2.07
7	Pinion 1st Stage CD26D |G19| Ø203.574x45 (z=60)	22935332	22972129 10.0
8	Pinion 1st Stage CD26D |G20| Ø190.320x45 (z=56)	22935340	22972129 8.60
9	Pinion 1st Stage CD26D |G21| Ø177.471x45 (z=52)	22935357	22972129 7.34
10	Pinion 1st Stage CD26D |G22| Ø156.437x45 (z=45)	22935365	22972129 5.47
11	Pinion 1st Stage CD26D |G23| Ø140.665x45 (z=40)	22935373	22972129 4.22
12	Pinion 1st Stage CD26D |G24| Ø132.877x45 (z=39)	22935381	22972129 3.66
13	Pinion 1st Stage CD26D |G25| Ø140.176x45 (z=40)	22935399	22972129 4.18

Technical Variants Pinion 2nd Stage Item 6

	Description Dimension [mm] [1]	Technical CCN	Material [1] Weight/Pc. [kg][1]
[1] For reference only - for current data see drawing / catalog / standard			
1	Pinion 2nd Stage CD26D |G13| Ø101.539x45 (z=28)	22935415	22972129 1.92
2	Pinion 2nd Stage CD26D |G14| Ø89.704x45 (z=25)	22935423	22972129 1.34
3	Pinion 2nd Stage CD26D |G15| Ø79.122x45 (z=22)	22935431	22972129 0.877
4	Pinion 2nd Stage CD26D |G16| Ø75.169x45 (z=21)	22935449	22972129 0.723
5	Pinion 2nd Stage CD26D |G17| Ø75.389x45 (z=21)	22935456	22972129 0.732
6	Pinion 2nd Stage CD26D |G18| Ø75.694x45 (z=21)	22935464	22972129 0.743
7	Pinion 2nd Stage CD26D |G19| Ø121.266x45 (z=35)	22935472	22972129 3.07
8	Pinion 2nd Stage CD26D |G20| Ø114.953x45 (z=33)	22935480	22972129 2.68
9	Pinion 2nd Stage CD26D |G21| Ø105.579x45 (z=30)	22935498	22972129 2.14
10	Pinion 2nd Stage CD26D |G22| Ø93.189x45 (z=26)	22935506	22972129 1.50
11	Pinion 2nd Stage CD26D |G23| Ø84.378x45 (z=23)	22935514	22972129 1.10
12	Pinion 2nd Stage CD26D |G24| Ø81.788x45 (z=23)	22935522	22972129 0.936
13	Pinion 2nd Stage CD26D |G25| Ø94.291x45 (z=26)	22935530	22972129 1.56